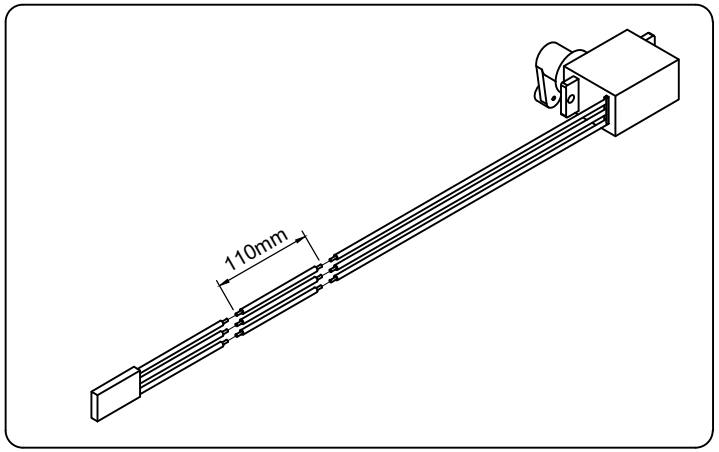
110mm

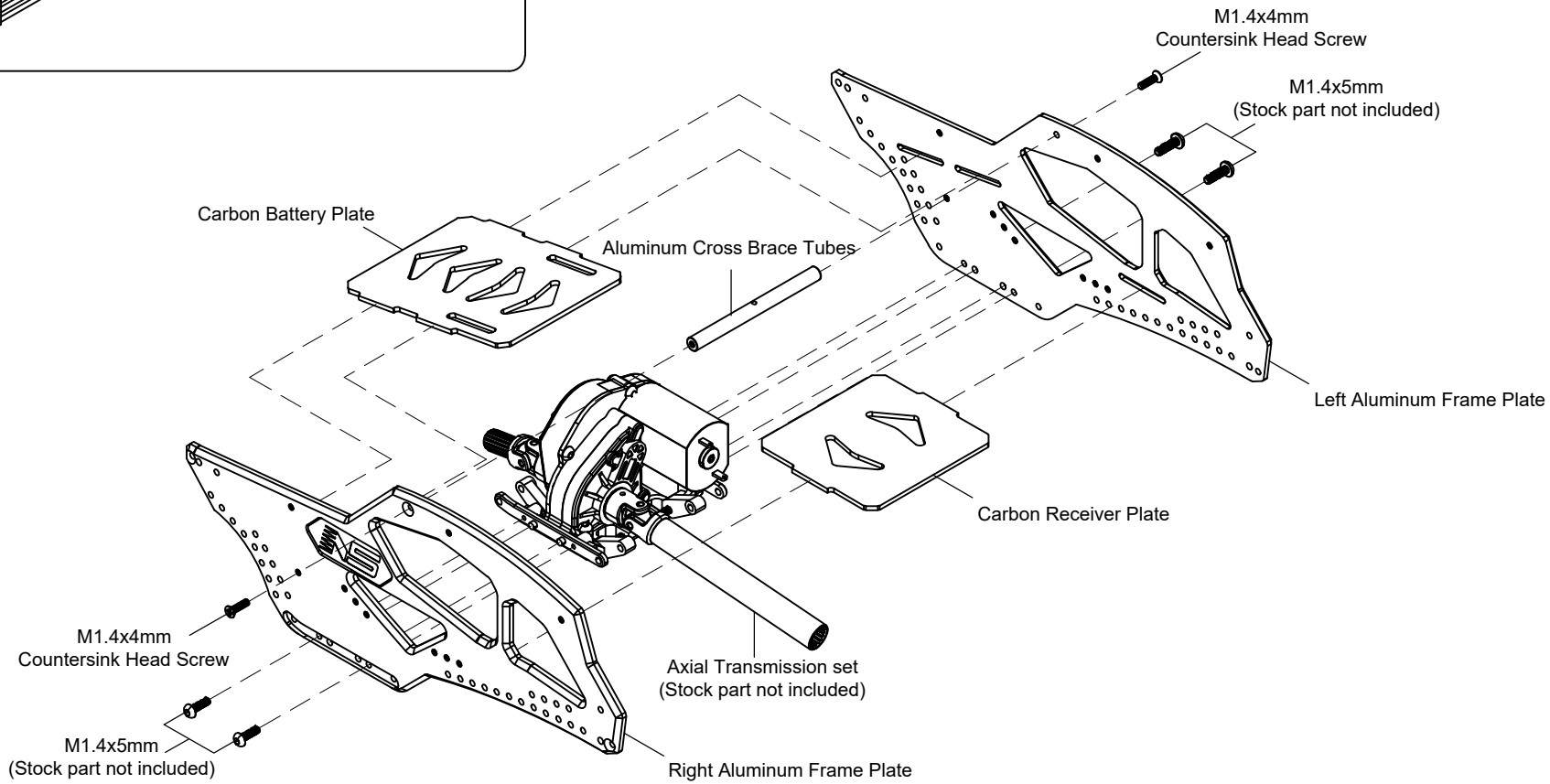
M1.4x4mm
Countersink Head Screw
M1.4x5mm
(Stock part not included)
Carbon Battery Plate
Aluminum Cross Brace Tubes
Left Aluminum Frame Plate
Carbon Receiver Plate
M1.4x4mm
Countersink Head Screw
Axial Transmission set
(Stock part not included)
M1.4x5mm
(Stock part not included)
Right Aluminum Frame Plate

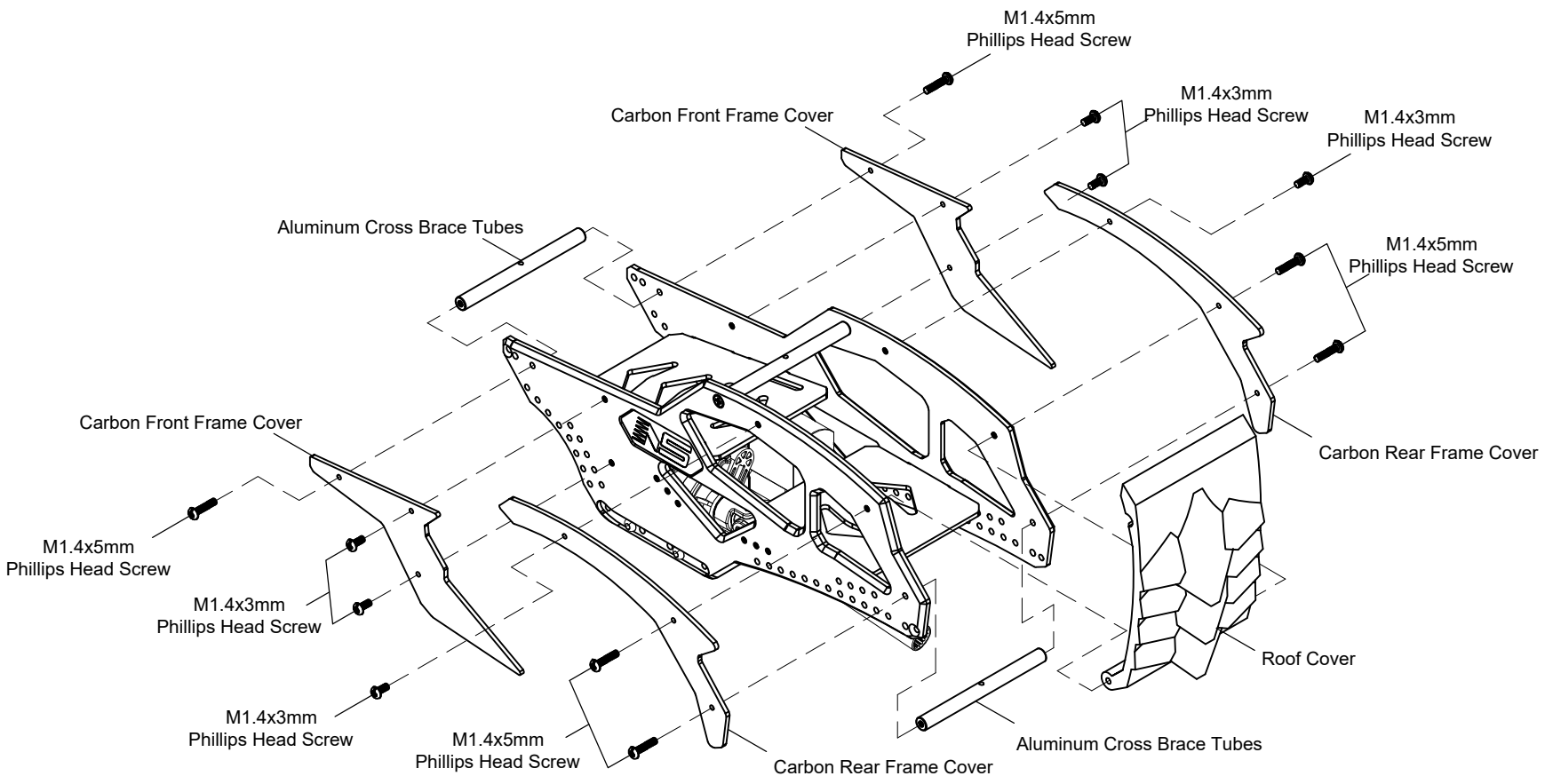
M1.4x5mm
Phillips Head Screw
M1.4x3mm
Phillips Head Screw
M1.4x3mm
Phillips Head Screw
Carbon Front Frame Cover
Aluminum Cross Brace Tubes
M1.4x5mm
Phillips Head Screw
Carbon Rear Frame Cover
Carbon Front Frame Cover
M1.4x5mm
Phillips Head Screw
M1.4x3mm
Phillips Head Screw
Roof Cover
M1.4x3mm
Phillips Head Screw
M1.4x5mm
Phillips Head Screw
Carbon Rear Frame Cover
Aluminum Cross Brace Tubes