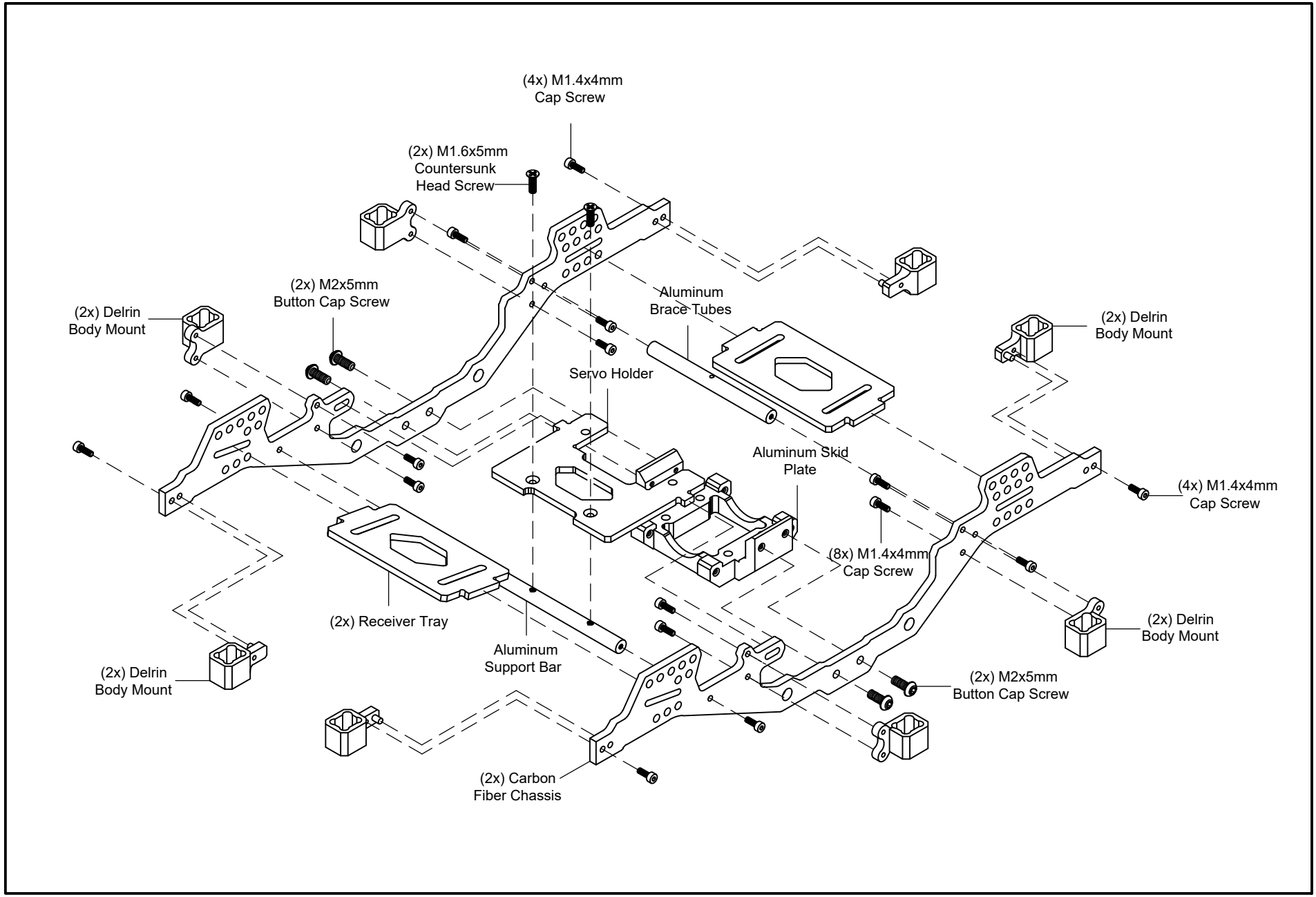
(4x) M1.4x4mm
Cap Screw
(2x) M1.6x5mm
Countersunk
Head Screw
(2x) M2x5mm
Button Cap Screw
(2x) Delrin
Body Mount
Aluminum
Brace Tubes
(2x) Delrin
Body Mount
Servo Holder
Aluminum Skid
Plate
(4x) M1.4x4mm
Cap Screw
(8x) M1.4x4mm
Cap Screw
(2x) Receiver Tray
(2x) Delrin
Body Mount
Aluminum
Support Bar
(2x) Delrin
Body Mount
(2x) M2x5mm
Button Cap Screw
(2x) Carbon
Fiber Chassis

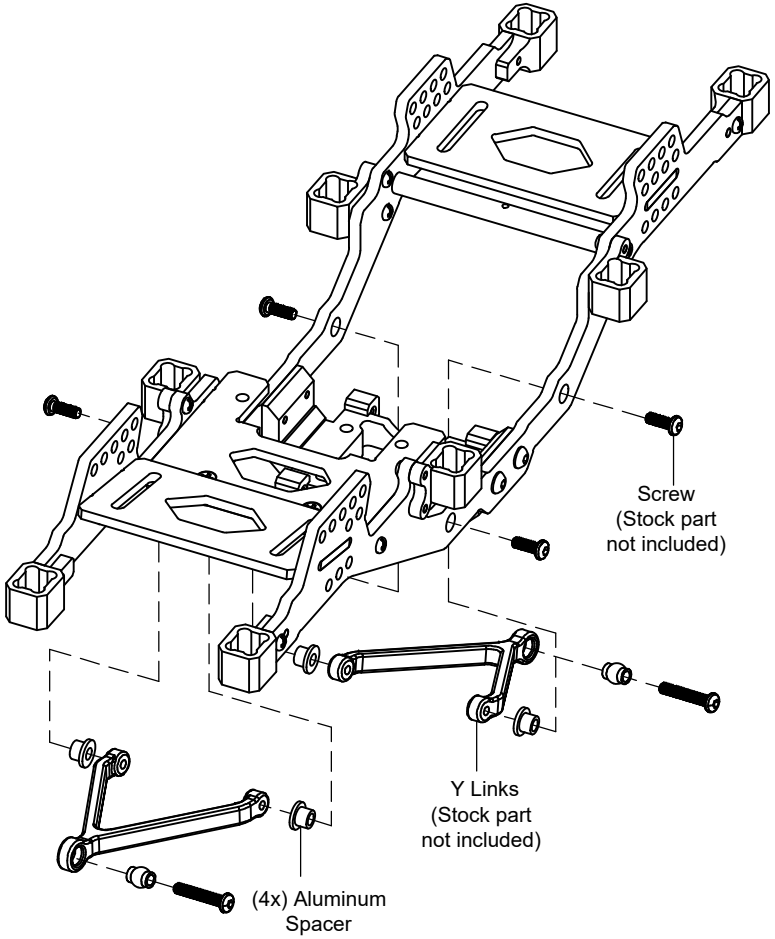
Screw
(Stock part
not included)
Y Links
(Stock part
not included)
(4x) Aluminum
Spacer

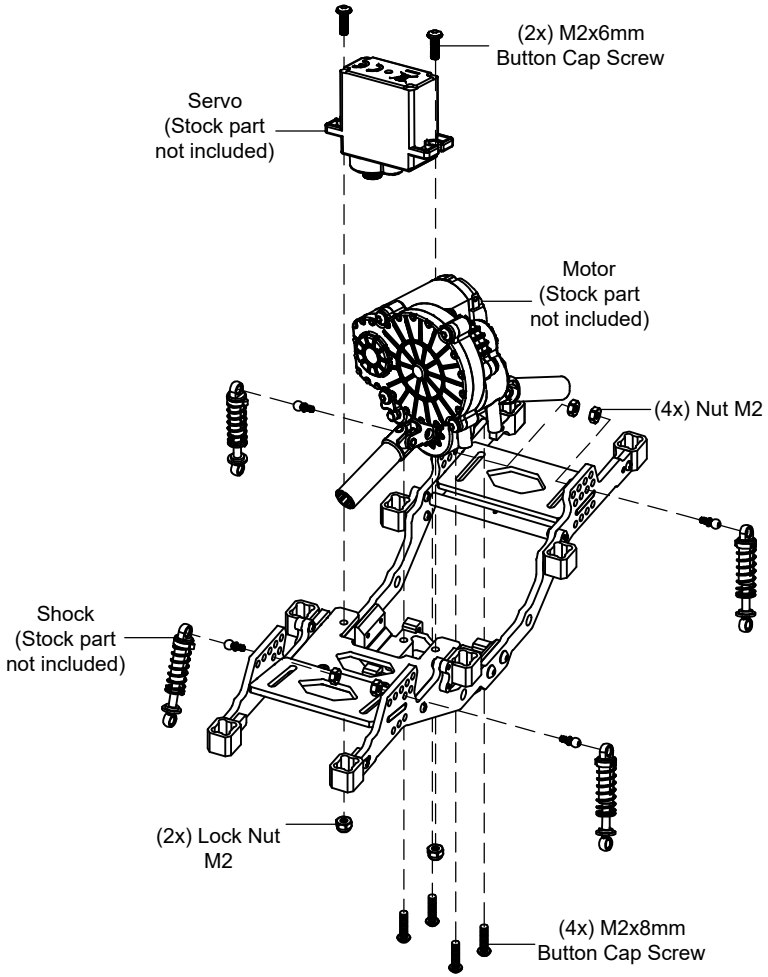
(2x) M2x6mm
Button Cap Screw
Servo
(Stock part
not included)
Motor
(Stock part
not included)
(4x) Nut M2
Shock
(Stock part
not included)
(2x) Lock Nut
M2
(4x) M2x8mm
Button Cap Screw